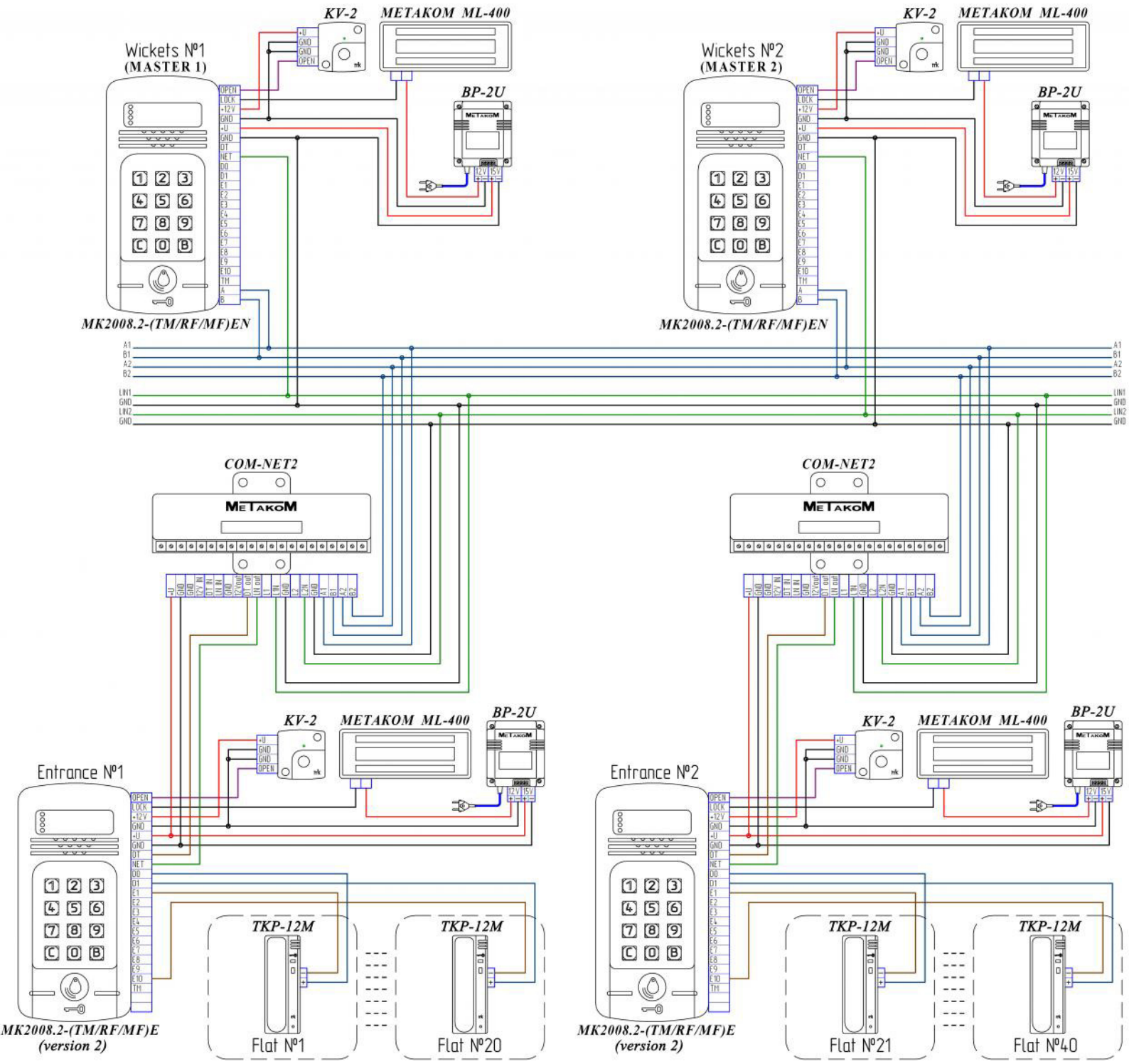Closed territory 2 wickets, 16entrance (audio)